INSTRUCTIONS FOR USE

KRINGS KS 60 MANHOLE

terra infrastructure

safety: efficient and sustainable

Manufacturer:	terra infrastructure GmbH Hollestraße 7A 45127 Essen, Germany
Phone:	+49 2433 453-0
Email:	info@terra-infrastructure.com
Homepage:	https://www.terra-infrastructure.com

CONTENTS

1. System Overview 3
2. Technical Parameters 4
3. Occupational safety and general information in accordance with DIN EN 13331-1/-2 6
3.1. Symbols in these instructions 6
3.2. Dangers 7
3.3. General safety information and measures for reduction of risks 7
3.4. Protection against falls and falling parts 8
3.5. Storage, transportation and lifting operations 9
3.6. Criteria for the inspection, repair and withdrawal of worn or damaged components 10
3.7. Applicable regulations 11
3.8. Personal protective equipment (PPE) 11
4. Assembly instructions 12
5. Installation instructions 14
5.1. Adjustment method 14
5.2. Lowering method 16
6. Removing instructions 19
7. Maintenance and repair 20

Information about the instructions for use

These instructions enable the safe and efficient use of the KRINGS KS 60 Manhole shoring box. The instructions are part of the systems and shall be kept in close proximity of the shoring site, accessible to the personnel at all times.

The personnel must read and understand these instructions thoroughly before starting to work. The prerequisite for safe work is observance of all safety precautions and work instructions specified in these instructions.

In addition, the local occupational health and safety regulations and general safety regulations for the area of application apply.

All safety-related dimensions conform with German safety and accident prevention regulations and German standards. The respective state-specific regulations are to be checked and applied before the work starts.

1. SYSTEM OVERVIEW

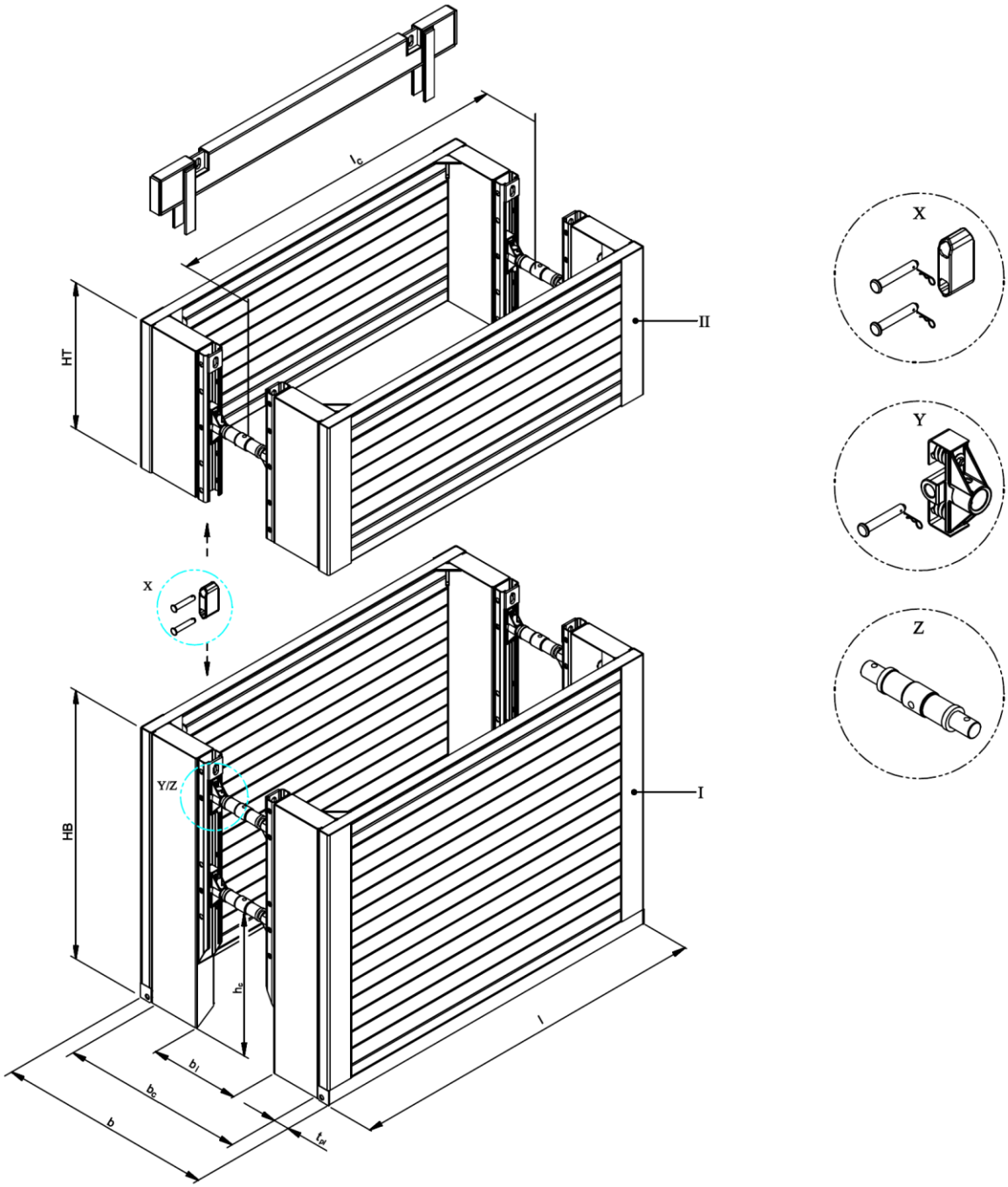

Designation for basic module B according to EN 13331-1:
ES-B-SV-C-XX-2,00/3,50x2,00/2,40x0,06-1,82/4,84-1,00/1,36-22,3/59,5-1,38/2,05

I	Base unit	b_c	Clear width
II	Top unit	b_i	Clear passage width
HB	Base unit height	h_c	Pipe culvert heigth
HT	Top unit height	t_{pl}	Panel thickness
l	Length	X	Connector with bolts
l_c	Pipe culvert length	Y	Spring socket with bolts
b	Shoring/trench width	Z	Spindle 98 x ...

2. TECHNICAL PARAMETERS

Base plates allowed plate moment=34.5 kNm/m

Art. no.	l [m]	h [m]	t_{pl} [m]	h_c [m]	l_c [m]	G/VP [kg]	G/Box [kg]	A [m²]	e_h [kN/m²]	Allowed side part moment [kNm]
135 208/L	2.00	2.00	0.06	1.00	1.61	550	1,380 *	4.00	59.5	136
135 209/L	2.50				2.11	605	1,490 *	5.00	39.7	
135 211/L	3.00				2.61	660	1,600 *	6.00	26.3	
135 212/L	3.50				3.05	770	1,820 *	7.00	26.6	
135 206/L	2.00	2.40	0.06	1.36	1.61	631	1,542 *	4.80	39.1	136
135 205/L	2.50				2.11	693	1,666 *	6.00	31.3	
135 200/L	3.00				2.61	755	1,790 *	7.20	26.1	
135 199/L	3.50				3.05	885	2,050 *	8.40	22.3	

* with spindle 98 x 700

Top plates allowed plate moment=34.5 kNm/m

Art. no.	l [m]	h [m]	t_{pl} [m]	h_c [m]	l_c [m]	G/VP [kg]	G/Box [kg]	A [m²]	e_h [kN/m²]	Allowed side part moment [kNm]
135 284/L	2.00	1.00	0.06	-	1.61	340	862 *	2.00	66.7	136
135 283/L	2.50				2.11	370	916 *	2.50	39.7	
135 300/L	3.00				2.61	400	982 *	3.00	26.3	
135 301/L	3.50				3.05	455	1,092 *	3.50	26.6	
135 285/L	2.00	1.30	0.06	-	1.61	430	1,043 *	2.60	66.7	136
135 286/L	2.50				2.11	470	1,122 *	3.25	39.7	
135 290/L	3.00				2.61	505	1,192 *	3.90	26.3	
135 291/L	3.50				3.05	580	1,342 *	4.55	26.6	

* with spindle 98 x 700

KRINGS spindle SP SB 98 x 550

Art. no. ZWST	Length ZWST [m]	Clear passage width b_i		Clear width b_c		Trench width b		Allowed compres-sive force [kN]	Weight single [kg]	Total weight [kg]
		min [m]	max [m]	min [m]	max [m]	min [m]	max [m]			
138 280 (Spindle 98x550)	without	0.81	1.01	1.82	2.02	1.94	2.14	360	22.0	53.8
139 430	0.30	1.11	1.31	2.12	2.32	2.24	2.44	358	13.8	68.0
139 445	0.50	1.31	1.51	2.32	2.52	2.44	2.64	352	17.7	71.9
139 385	1.00	1.81	2.01	2.82	3.02	2.94	3.14	298	28.0	82.2
139 400	1.50	2.31	2.51	3.32	3.52	3.44	3.64	193	37.4	91.6
139 420	2.00	2.81	3.01	3.82	4.02	3.94	4.14	136	47.3	101.5
139 425	2.50	3.31	3.51	4.32	4.52	4.44	4.64	115	60.0	114.2

KRINGS spindle SP SB 98 x 700

Art. no. ZWST	Length ZWST [m]	Clear passage width b_i		Clear width b_c		Trench width b		Allowed compres-sive force [kN]	Weight single [kg]	Total weight [kg]
		min [m]	max [m]	min [m]	max [m]	min [m]	max [m]			
138 290 (Spindle 98x700)	without	0.99	1.33	2.00	2.34	2.12	2.46	357	34.0	65.8
139 430	0.30	1.29	1.63	2.30	2.64	2.42	2.76	347	13.8	80.0
139 445	0.50	1.49	1.83	2.50	2.84	2.62	2.96	326	17.7	83.9
139 385	1.00	1.99	2.33	3.00	3.34	3.12	3.46	228	28.0	94.2
139 400	1.50	2.49	2.83	3.50	3.84	3.62	3.96	151	37.4	103.6
139 420	2.00	2.99	3.33	4.00	4.34	4.12	4.46	123	47.3	113.5
139 425	2.50	3.49	3.83	4.50	4.84	4.62	4.96	98	60.0	126.2

Accessories

No.	Art. no.	Designation	G [kg]
1	138 280	Spindle 98x550	22.0
	138 290	Spindle 98x700	34.0
2	138 200	Safety clip	0.1
3	139 430	ZWST 300 mm	13.8
	139 445	ZWST 500 mm	17.7
	139 385	ZWST 1,000 mm	28.0
	139 400	ZWST 1,500 mm	37.4
	139 420	ZWST 2,000 mm	47.3
	139 425	ZWST 2,500 mm	60.0
4	138 070	Bolt Ø43 x 212 mm	2.5
5	138 170	Spring socket	13.0
6	138 030	Bolt Ø20x125 mm	0.4

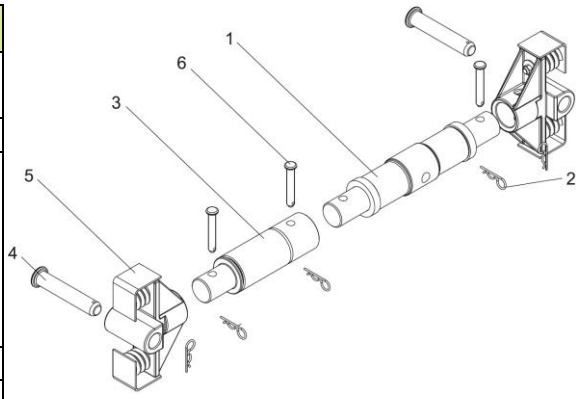

No.	Art. no.	Designation	G [kg]
7	139 100	Connector	5.5

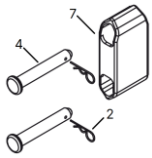

No.	Art. no.	Designation	G [kg]
8	861 077	Pressure beam L=1.80 m	80.0
	861 078	Pressure beam L=2.30 m	95.0
	861 079	Pressure beam L=2.80 m	110.0
	861 080	Pressure beam L=3.30 m	125.0

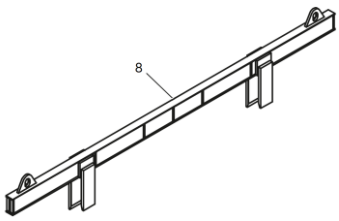

l	Length	t_{pl}	Panel thickness
l_c	Pipe culvert length	A	Surface
h	Panel height	e_h	Admissible soil pressure
h_c	Pipe culvert height	ZWST	Extension bar
b	Shoring/trench width	G	Weight
b_c	Clear width	G/VP	Weight / Shoring panel
b_i	Clear passage width	G/Box	Weight / Shoring box

3. OCCUPATIONAL SAFETY AND GENERAL INFORMATION IN ACCORDANCE WITH DIN EN 13331-1/-2

3.1. Symbols in these instructions

Safety information

The following occupational safety symbols are on all occupational safety information which indicates a danger to life and limb of personnel and are identified by a pictogram, a signal word and a signal colour.
You can find explanations of the dangerous situations at the relevant points in the documentation.
Observe this information at all times!
Observe the applicable local safety and accident prevention regulations at all times!

All the following dimensions conform with German safety regulations.

DANGER

Type and source of danger
This symbol warns of an immediate danger to the life and health of personnel.
Failure to observe these warnings results in serious repercussions for health, culminating in life-threatening injuries and extensive property damage.
Action which must be refrained from so that the danger does not occur.

WARNING

Type and source of danger
This symbol warns of an imminent danger to the life and health of personnel, and of environmental and property damage.
Failure to observe these warnings may result in serious repercussions for health, culminating in life-threatening injuries and/or extensive environmental and property damage.
Action which must be refrained from so that the danger does not occur.

CAUTION

Type and source of danger
This symbol warns of an imminent danger to the health of personnel and of environmental and property damage.
Failure to observe these warnings may result in moderate or slight repercussions for health, culminating in injuries and/or extensive environmental and property damage.
Action which must be refrained from so that the danger does not occur.

HINT

Type and source of the machine or plant damage
This symbol warns of a dangerous situation and serves to mark a note on how to deal with trench shoring.
Failure to follow these instructions can lead to extensive property damage.
Action that must be omitted in order to prevent damage from occurring.

Tips and recommendations

This symbol highlights useful tips and recommendations, as well as information for efficient and fault-free operation. Action which must be refrained from so that the danger does not occur.

Other markings

The following markings are used to highlight instructions, results, lists, references and other elements in these instructions:

Marking	Explanation
1., 2., 3. ...	Step-by-step instructions
	Results of action steps
	Listings without a fixed order

3.2. Dangers

When working on and in excavations and trenches, the following dangers with the potential to cause serious injuries or death arise, among others:

- Being buried under volumes of soil or gravel which slip
- Being buried as a result of failure of the shoring
- Personnel falling
- Being affected by falling or tipping parts
- Tripping, slipping, falling
- Forced postures in confined working spaces
- Crushing of hand and feet during loading and unloading, transportation, assembly and disassembly, and installation and removal of the shoring elements

3.3. General safety information and measures for reduction of risks

Please note that an appropriate risk assessment must be generated for the specified work step before assembly, installation and removal and disassembly of the shoring system.

Compliance with the technical specifications and safety information in these use instructions is required at all times.

DANGER

Risk of death or injury owing to insufficient safety measures on the construction site and for adjacent installations / trades!

Insufficient safety measures on the construction site and for adjacent installations / trades result in a risk of death or injury, as well as a risk of property damage to the shoring!

- Attention must be paid to overhead lines during transportation and during installation and removal of the shoring.
- On sloping or uneven ground, the shoring must set up at as close to a right angle to the slope as possible.
- The use instructions must be present of the construction site.
- When using the shoring system, the maximum permitted loads as specified in these use instructions may not be exceeded.
- Shoring systems may only be used in ground which is not susceptible to slippage; water table drawdown measures must be taken where applicable.
- The stability of the shoring must be ensured in all installation and removal, assembly and disassembly states.
- The shoring must be installed in a horizontal position.
- Only put up shoring units on solid and even surfaces and secure against falling where applicable – possible factors which may affect stability, e.g. site incline, wind loads, vibrations from traffic loads and/or work tools, soil condition, etc., must be taken into account.
- Take traffic safety measures us trenches are established in the vicinity of public roads or if the establishment affects traffic. Consult with the relevant authorities.
- The shoring must reach to the bottom of the trench. In minimum stiff, cohesive soils,

the shoring for construction operations which will be finished in a few days may end up to 0.50 m above the bottom of the trench if there are no exceptional influences and no earth pressure is to be absorbed from building loads.

- Throughout the construction phase, the front area must be secured through frictional connection and/or battered in accordance with the national regulations.
- Shoring elements placed on top of one another must be frictionally connected to one another at all points provided for in the design.
- Cavities should be filled immediately in a force-fitting manner.
- In order to ensure the safe execution of works, material transportation, and in particular the rescue of injured personnel, minimum working area widths in accordance with DIN 4124 must be complied with (minimum working are width for excavations/trenches ≥ 0.6 m); the appropriate national regulations must be applied where applicable.
- All parts of the shoring must always be inspected after heavy rainfall, in the event of significant changes to the loading, at the onset of a thaw, after a long interruption in the works, after extraordinary stresses (e.g. owing to impacts or vibrations) or after blasts.
- Removal of the shoring must be done in conjunction with backfilling.

Tips and recommendations

- Traffic safety must be ensured, by means of bollards or specially assigned safety personnel, for example.
- The construction site must be sufficiently marked as such, using warning signs, for example.

3.4. Protection against falls and falling parts

DANGER

Risk of death or injury owing to falls or falling parts!
Falls or falling parts result in a risk of death or injury, as well as a risk of property damage to the machine and/or system! The following measures must be implemented, depending on the construction site.

- Transitions are required for trenches with a width of > 0.80 m; the transitions must be at least 0.50 m wide.
- At a trench depth of > 1.00 m, the transitions must be equipped with a three-part side guard on both sides to protect against falling.
- At a trench depth of > 1.25 m, steps or ladders must be used for access.
- In order to protect against falling parts or against excavated soil slipping back in, the shoring must have an overhang over the top edge of the trench – at trench depths of 2.0 m this must be min. 5 cm, at trench depths of greater than 2.0 m it must be min. 10 cm.
- The front sides of the trenches or excavations must either be secured using appropriate shoring systems or, depending on the soil condition, battered accordingly.
- At the top edge, a protective strip which is at least 0.60 m wide must be kept free from loads and in particular from construction machinery and vehicles.
- Fall protection systems must be installed in excavations and trenches with a possible fall height of greater than 2 m.
- For activities for which the installation of effective fall protection is generally not possible (e.g. during installation of the shoring, during excavation, during cable laying or during backfilling), this must be reviewed and justified within the risk assessment.

3.5. Storage, transportation and lifting operations

Storage

DANGER

Risk of death or injury owing to incorrect storage!
Incorrect storage results in a risk of death or injury, as well as a risk of property damage to the machine and/or system!

- The shoring elements may only be stored on solid, even ground.
- In the event that shoring panels are stored in stacks, the maximum permitted stack height must be observed – rule of thumb: max. stack height [m] = 4 x width of the narrow side [m].
- Care must be taken to ensure that the shoring panels are aligned perpendicular with one another during storage and transportation; support staves and non-slip mats or similar must be used where applicable in order to ensure safe storage and safe transportation.
- The prescribed safety distances from trench and excavation walls (see 3.3) must always be complied with for storage.

Transportation and lifting operations

DANGER

Risk of death or injury owing to suspended, hauled or towed loads!
Loads may swing out and fall during lifting operations. Hauled or towed loads may tip over. There is a risk of death or injury, as well as a risk of property damage to the shoring!

- Assembly of the guide frame may only be done in a horizontal position. Assembly in vertical alignment is EXPRESSLY prohibited!
- For transportation, the use of cranes or hydraulic excavators using hoisting operation is preferred; during transportation with forklifts, attention must be paid to the fact that the ground on a construction site is frequently uneven. This may lead to the load slipping or falling – additional safety measures are required where applicable for transportation with forklifts.
- Hydraulic excavators using hoisting operation must be equipped with an overload warning system and a line-break safety device; the overload warning system must be switched on in hoisting operation.
- The lifting gear, load handling attachment and sling must be chosen according to the load; the dynamic loads, e.g. when pulling boxes (removal), must also be taken into account here in addition to the static loads.
- All lifting gear, load-handling attachments and slings must be tested and approved.
- Do not pull shoring elements through the trench (exception: dragboxes).
- When using slings, the use of edge protection is required if the sling is routed against sharp edges.
- Only load hooks with safety catches may be used in order to prevent unintentional unhooking of the load during lifting, pulling or transportation; in the event that the safety catch does not close owing to the design, the use of shackles or round slings as connectors is required.
- The shoring elements may only be attached and transported using the intended attachment points.
- The loads must be attached such that the shoring elements are in a horizontal position; pendulum movements must be reduced to a minimum during transportation; diagonal pulls are not permitted.
- The angle of inclination between the sling and the notional vertical at the

attachment point may not exceed 60°.

- Transportation must be done as close to the ground as possible.
- Never carry the load over personnel.
- Attached loads must be guided with guide lines/guide rods; always walk behind the load and do not walk backwards.
- The accompanying persons for guiding the load and slingers must always remain within the machine operator's field of vision off the track and outside the danger area.
- Accompanying persons for guiding the load and slingers must have safe footing; never stand between a suspended load and a fixed abutment (risk of crushing!).
- Care must be taken to ensure that fingers are always free during lifting, guiding and set down; never guide loads using the sling.
- The applicable national rules and regulations must be observed and complied with.

3.6. Criteria for the inspection, repair and withdrawal of worn or damaged components

- Shoring elements must be subjected to functional testing and a visual inspection for obvious defects, e.g. on struts, top layers of the panels, welding seams, stabilizers, attachment points, by supervisors before each use.
- If defects which reduce the load capacity are found, in particular damaged struts, cracked welding seams or excessively deformed, cracked or worn out attachment points, the shoring elements may only be used again after professional repairs by the manufacturer.
- Furthermore, missing parts such as nuts, screws, connectors, bolts and stabilizers, or broken parts such as spindles, bolts and spreader systems result in withdrawal of individual system elements.
- Defecting parts must be replaced or repaired before use. The elements may only be used again after approval by the manufacturer.
- In the event of significantly deformed or warped parts or in the event of holes, e.g. in the panel body, the manufacturer must always be consulted before the shoring element is used.
- Small repairs may be carried out by the user himself where applicable – however this may only be done in consultation with the manufacturer.
- Only original parts from the manufacturer may be used.
- The manufacturer provides no warranty for repairs which are improperly performed and for the use of parts which are not original parts.
- Before each (repeated) use and after reassembly of the shoring elements or after exceptional disturbances (see chapter 3.2), the tightness of all screw connections must be checked and they must be tightened where necessary.
- If there is any doubt about the usability of the shoring elements, and in the event of defects and damage, the manufacturer must be contacted.
- Soil which has adhered to the shoring elements must be cleaned off after use.
- In order to increase the service life, regular renewal of the pain (rust protection, top coat) is recommended.

3.7. Applicable regulations

The applicable national rules and regulations must be observed and complied with. The following regulations apply in the current version:

- Regulations of the BG Bau [German Employers' Liability Insurance Association] – Technical Committee Civil Engineering
- DIN 4124 Construction Pits and Ditches
- DIN EN 13331 – Part 1 – Product specifications, Part 2 – Verification by calculation or testing
- General safety instructions and the Industrial Safety Ordinance

Our products bear the GS mark "Tested Safety"

3.8. Personal protective equipment (PPE)

Personal protective equipment serves to protect personnel against health and safety risk while working.

In principle, the necessary personal protective equipment for the activities is the result of your risk assessment.

We recommend the following PPE for loading and unloading activities, assembly and disassembly, transportation/lifting operations, maintenance and repair, and for activities in the area with shoring:

PROTECTIVE CLOTHING	
	Protective clothing is tight-fitting workwear which tears easily, with tight sleeves and with no protruding parts.
HELMET	
	Safety helmets protect the head against falling objects, swinging loads and impacts against fixed objects.
GLOVES	
	Protective gloves protect the hands against friction, abrasions, punctures, cuts or deeper injuries.
SAFETY SHOES	
	Safety shoes protect the feet against crushing, falling parts and slipping on slippery surfaces. Furthermore, S3 safety shoes are puncture-resistant and thus protect against injuries to the feet resulting nails, metal chips, etc.

4. ASSEMBLY INSTRUCTIONS

Before starting the work, it is obligatory to observe all safety precautions from section "Occupational health and safety and general remarks according to DIN EN 13331-1/-2" (see section 3 Occupational health and safety and general remarks according to DIN EN 13331-1/-2)!

Hint:

The assembly of the KRINGS KS 60 Manhole is carried out in the same way as the assembly of the KRINGS KS 60 box and is therefore shown using the KS 60 box.

1. Positioning the panel half on the ground

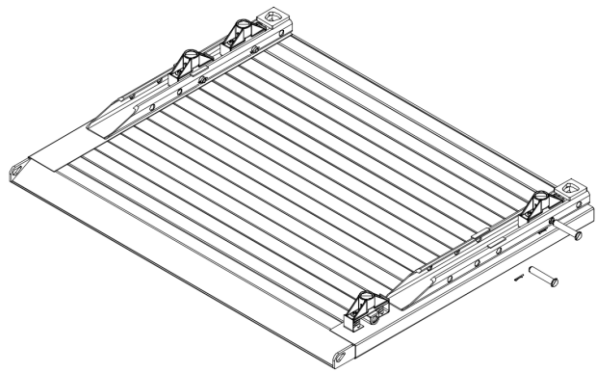

Place the first panel half on level ground with the traverse facing upwards.

Insert the pretensioned spring sockets into the traverse, insert the corresponding plug-in bolts (Ø43x212 mm) into the provided locating holes of the traverse and the spring socket and secure by means of safety clips.

Release the spring socket by loosening the nuts.

2. Inserting the spindles

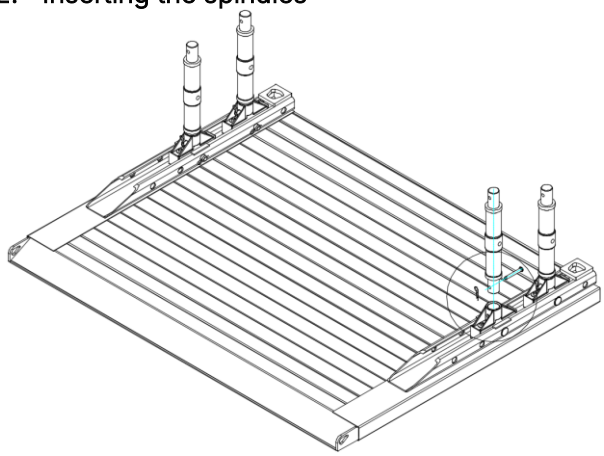

Insert the spindles into the spring sockets, insert the plug-in bolts (Ø20x125 mm) and secure them with safety clips (see detail X).

If required, i.e. according to the trench width, extension bars can be used. These are placed on the spindles, alternately offset for static reasons, fixed with plug-in bolts (Ø20x125 mm) and secured with safety clips.

X

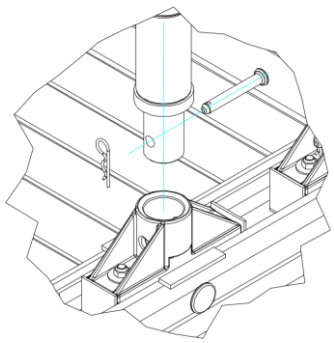

3. Setting up the panel half

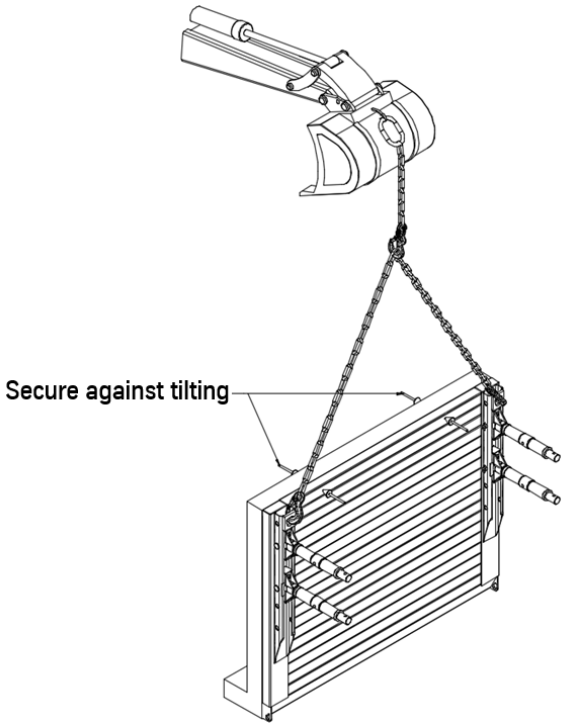

The pre-assembled first panel half is set up and secured against tipping over.

The second panel half is to be mounted horizontally, analogous to the first half of the panel. The spring sockets must be inserted and secured.

The system is assembled by using a lifting gear and suitable lifting slings (GS approval).

4. Assembling the shoring box

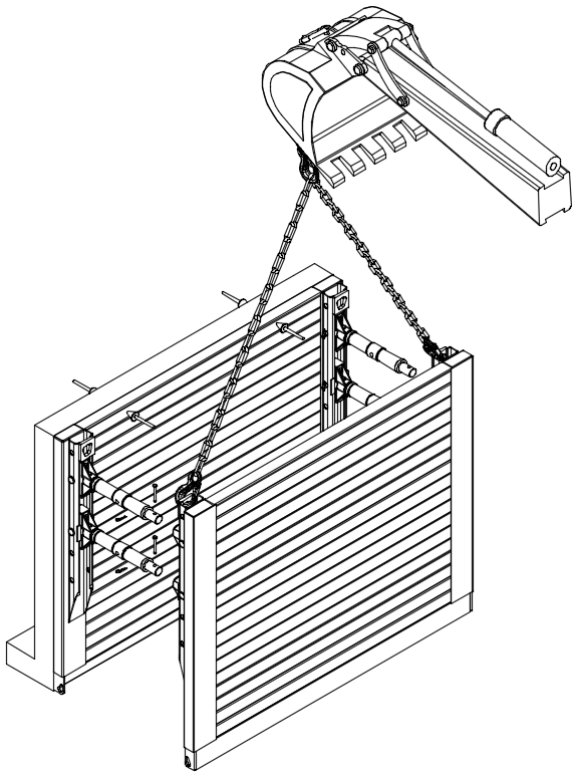

The second base module, which is equipped with spring sockets, is swiveled towards the first base module.

The spring sockets are bolted to the spindles/extension bars of the first base module and secured with safety clips.

5. INSTALLATION INSTRUCTIONS

Note: According to DIN EN 13331, edge-supported shoring systems are abbreviated with the letters ES.

Permissible forces

The following tensile forces can be accomodated at the individual attachment points of the shoring plate:

1) Per lifting eye at the top of the plate (centred):
   $F_{pl,z,Rk}$= 65.0 kN

2) Per lifting eye at the traverse:
   $F_{pl,z,Rk}$= 51.0 kN

3) Per transport eye at the cutting edge:
   $F_{pl,z,Rk}$= 20.0 kN

5.1. Adjustment method

1. Preconditions

For all work, observe the applicable regulations from DIN, EN, UVV [German accident prevention regulations] and BGBau [German employers' liability insurance association for the construction industry].

In the adjustment method, trench shoring units are adjusted into a section of trench that has previously been excavated to its final depth according to the provisions in DIN 4124.

The adjustment method is only permissible if the following preconditions have been fulfilled:

- Temporarily firm ground
- Vertical ditch walls
- Same trench width for the entire length of the shoring unit
- The trench must not be entered before the trench shoring unit is adjusted.
- There must be no crossing pipes, buildings or other structures and / or traffic areas within the range of the trench.
- The degree of anticipated settlement, loosening and displacement of soil within the range of the trench is acceptable.

The ground is considered temporarily firm if no major crumbling is noted in the period from the start of excavation until the adjustment of the shoring.

The permissible load values according to the technical data of the shoring system used must be complied with. For details regarding the trench depth, refer to DIN 4124.

It is forbidden at all times to enter trenches with a trench depth ≥ 1.25 m without shoring or slope. It is also prohibited to stay or to work with heavy machinery in the area of risk e. g. the edge of the pit.

2. Use of top plates

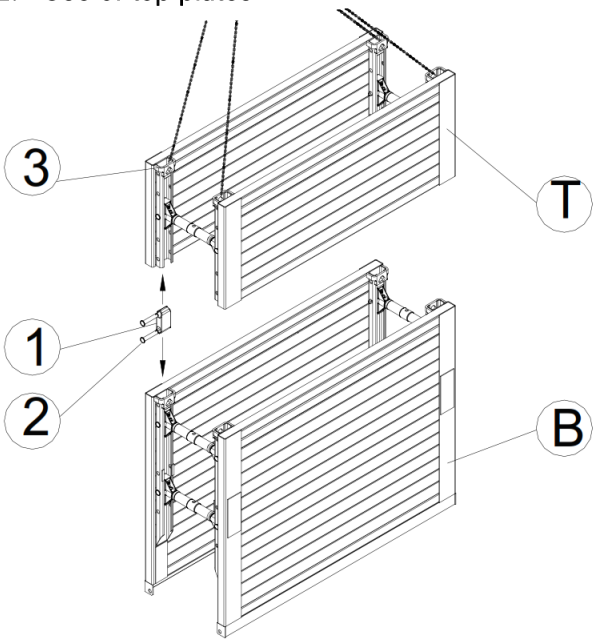

In the adjustment method, the assembly of the base (B) and top module (T) must be carried out outside the trench.

The system must be set as a whole in the trench if shoring boxes with top boxes are required to secure deeper trenches.

The base and top modules are connected by connectors (1) and bolts (Ø43x212 mm) with safety clips (2).

The system is assembled by using a lifting gear and suitable lifting slings (GS approval).

The lifting sling must be hooked exclusively and at least four points (ES) into the lifting eyes (3) provided for this purpose.

3. Installation

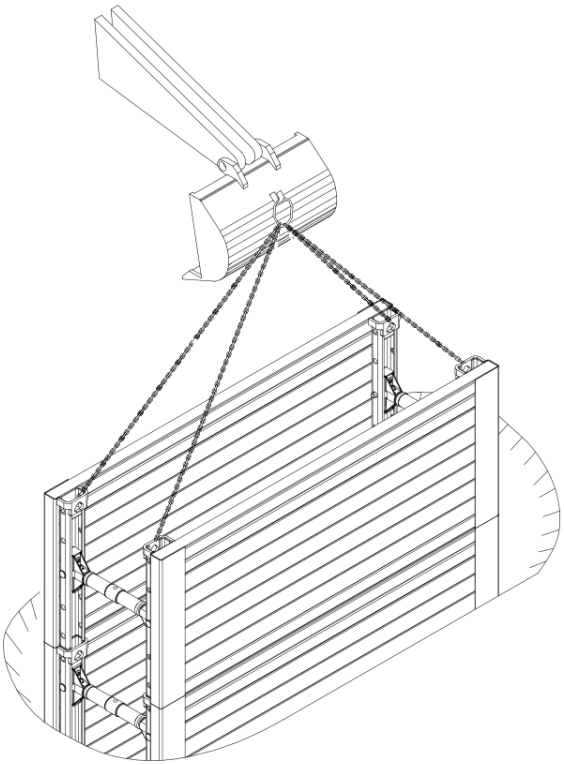

The shoring system prepared outside the pit is inserted with lifting gear and suitable and lifting slings (GS approval) into the trench which has been excavated to the final depth for the length and width of a shoring box.

The length of the excavated and unsecured trench section must be limited to a length required for the installation of one single trench shoring unit.

The gap between the trench wall and the inserted shoring unit must be backfilled right up to the top. In addition, the shoring unit should be pressed against the trench wall by spindling out the struts.

The permissible load values according to the technical data of the shoring system used must be complied with at all times. For details regarding the trench depth, refer to DIN 4124.

5.2. Lowering method

1. General

In the lowering method, trench shoring units or parts of it are pressed vertically into the ground.

The lowering method is only permitted for edge-supported shoring systems. Centrally supported trench shoring systems must not be used in the lowering method.

2. Pre-adjustment of the shoring systems

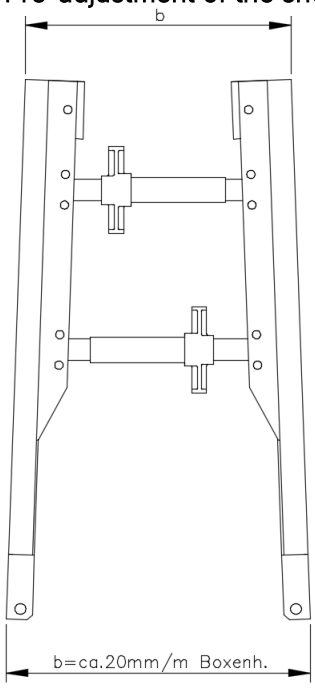

Before using the applicable shoring system, its struts must be adjusted by turning the spindles in such a way that the distance between the shoring plates of one shoring unit is greater at the bottom than at the top.

This so-called A-shape is achieved by extending the spindles of the bottom strut approx. 20 mm/m box height more than the spindles of the top strut.

3. Advanced excavation, insertion and alignment of the shoring unit

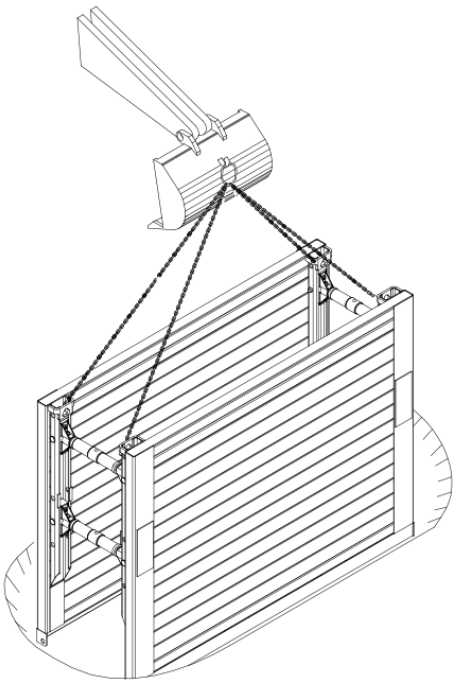

After the trench alignment has been measured, advanced excavation for inserting the first shoring unit takes place. This is adjusted and aligned centrally and parallel to the trench axis by means of lifting gear and lifting slings (GS approval, lifting eyes).

4. Lowering the shoring system

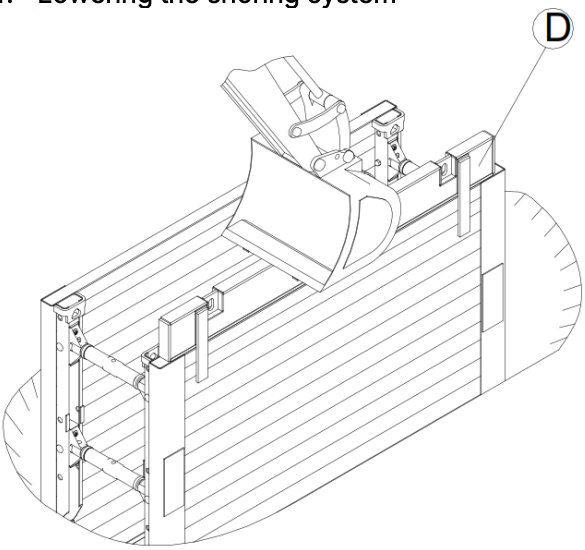

The lowering takes place alternately with the soil excavation.

During the lowering process, the advance soil excavation underneath the panels must not exceed 0.50 m.
During the alternate pressing of the shoring walls, care must be taken to ensure that the possible angle of rotation in a vertical plane between strut and shoring wall does not exceed δ = +/- 8°.

Pressure plates and/or pressure beams (D) are to be used for the lowering process. Care must be taken to ensure that the shoring plates are not used as "chisels".

To avoid settlement on the surface, the gap between the trench wall and the inserted shoring unit must be backfilled right up to the top.

5. Top plate

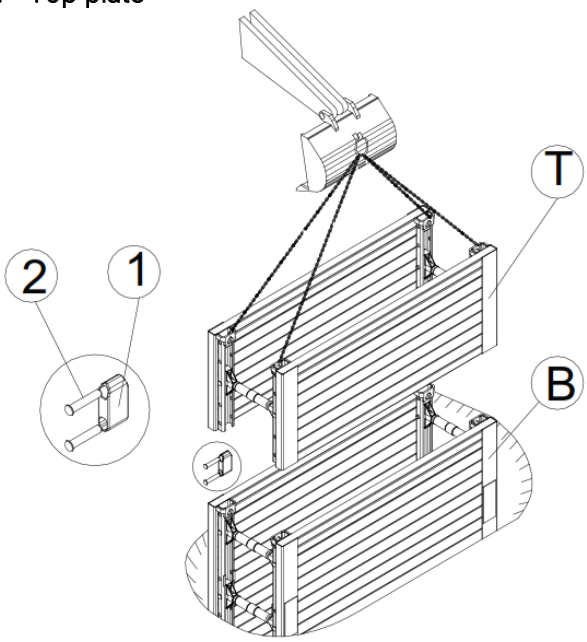

Depending on the required trench depth, top modules (T) are mounted on the base modules (B).

Base and top modules are to be connected by connectors (1) and bolts (Ø43x212 mm) (2). Here too, pressure plates and / or pressure beams must be used for the further lowering process.

6. Installation of the next shoring field

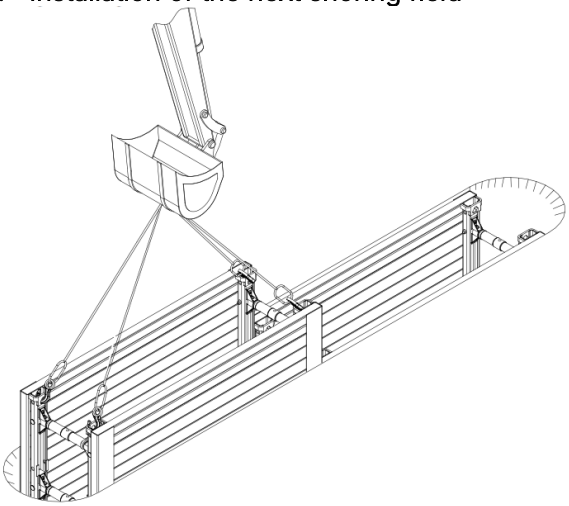

The next shoring unit will be installed as soon as the previous system has been fully lowered to the bottom of the trench.

The installation is carried out according to the previously described points.

The shoring must be complete. Wall sections that cannot be secured with shoring units, e.g. due to crossing pipes, must be shored separately.

7. Pipe laying

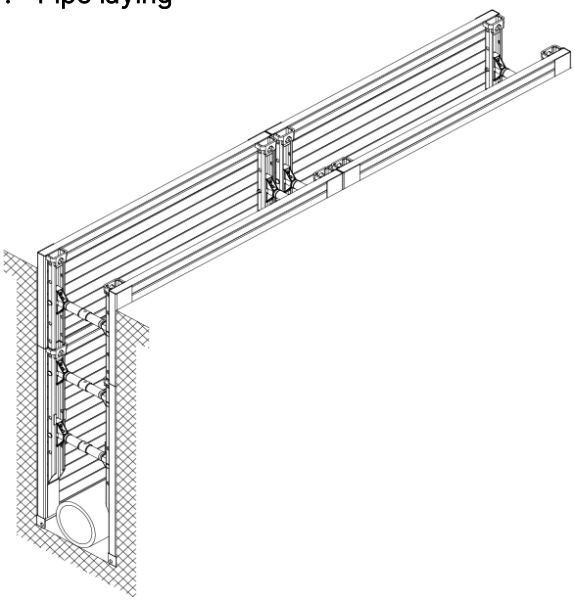

Once the shoring has been lowered completely and without gaps to the bottom of the trench in the desired length, pipe laying work can begin.

6. REMOVING INSTRUCTIONS

Removing, backfilling and compacting

After completing the pipe-laying work the shoring is removed with layer-by-layer backfilling and compacting. To this end, the shoring is extracted step-by-step in accordance with the instructions of the local site management and the expert's specifications and the backfilling material returned to the trench is compacted against the existing soil.

Lifting slings may only be attached to the provided attachment points.

During removal, the possible rotation angle in a vertical level between strut and shoring wall may not exceed δ = +/- 8°.

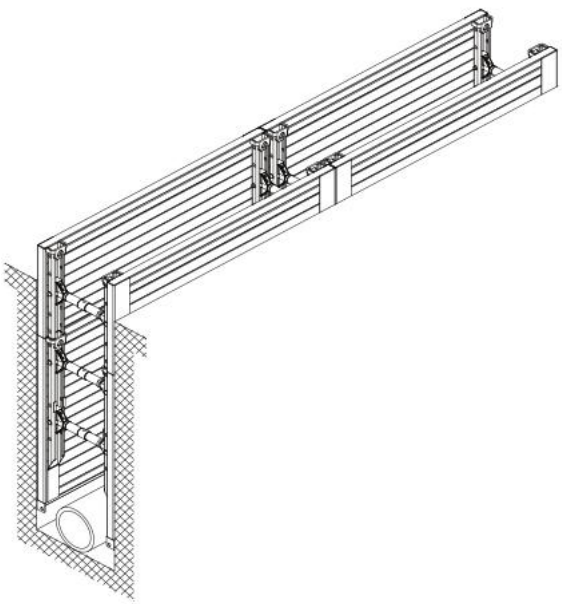

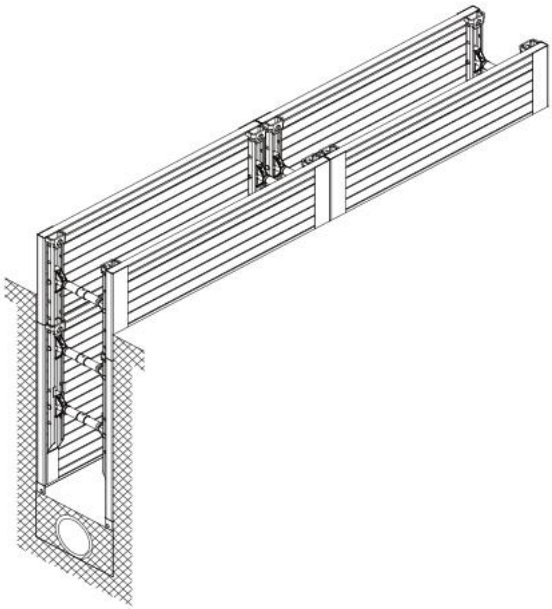

7. MAINTENANCE AND REPAIR

All shoring components must be checked for proper functioning before they are used in subsequent shoring fields.

Defective parts must be replaced and / or repaired.

Minor repairs can be carried out by the user after consultation with the manufacturer.

Only use original spare parts from the manufacturer!

No warranty for improperly performed repairs and use of non-original parts

Baltic States
terra infrastructure UAB
Liepų str. 83
93269 Klaipėda
Lithuania
P: +370 46 355-401
info@terra-infrastructure.lt
www.terra-infrastructure.com/lt

Eastern Europe
terra infrastructure GmbH
Hollestr. 7a
DE-45127 Essen
Germany
P: +49 201 565 783 20
easterneurope@terra-infrastructure.com
www.terra-infrastructure.com/eu/en

South West Europe
terra infrastructure GmbH
Hauptstrasse 35a
77866 Rheinau-Freistett
Germany
P: +49 7844 9143 0
export-sweurope@terra-infrastructure.com
www.terra-infrastructure.com/eu/en

Group Headquarter
terra infrastructure GmbH
Hollestr. 7a
DE-45127 Essen
Germany
P: +49 201 565 783 20
info@terra-infrastructure.com
www.terra-infrastructure.com